UL SPECIFICATION

* FIXTURE SHALL BE LISTED FOR LOCATION ONLY AND LABELED AS SUCH.
* FIXTURE MUST BE MANUFACTURED IN ACCORDANCE WITH UL STANDARD 1598.

PARTS SPECIFICATIONS

ITEM	QTY	DESCRIPTION
A	(1)	SOCKET- UL LISTED/CSA CERTIFIED BASE= MEDIUM SOCKET= PORCELIN SEE LEAD WIRE FOR SOCKET WIRE SPEC.
B	(1)	LEAD WIRE- 8" UL LISTED/CSA CERTIFIED, AWG #18 150°C BLACK AND WHITE WIRE.
C	(1)	GROUND WIRE- 8"

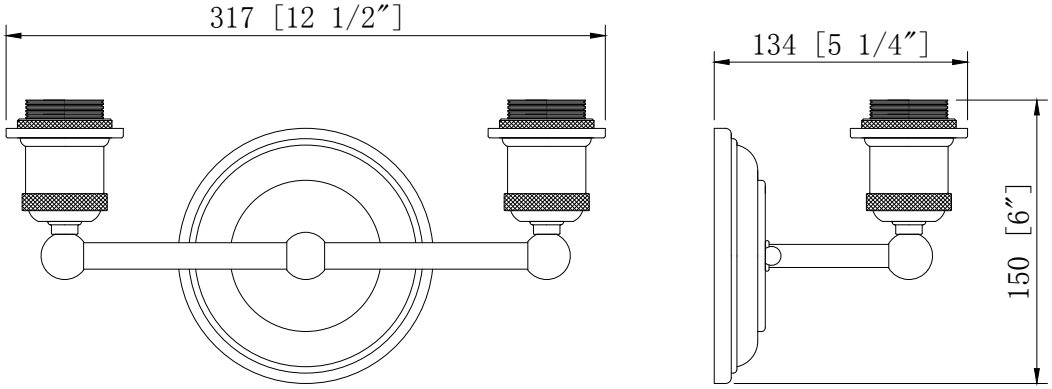

INNOVATIONS LIGHTING

DESIGN COPYRIGHT - 29/07/2020
ALL RIGHTS RESERVED AND MAY NOT BE DUPLICATED WITHOUT OUR WRITTEN PERMISSION

NO.	PART NO.	DESCRIPTION	REQ.

NOTICE: ANY DESIGN OR OTHER INFORMATION HEREON DEVELOPED BY THIS COMPANY IS CONFIDENTIAL MATERIAL AND EXCLUSIVE PROPERTY OF THE L.D. ALIYA CO. DISCLOSURE OR REPRODUCTION REQUIRES THE WRITTEN CONSENT OF THE L.D. ALIYA CO.

INNOVATIONS
CREATIVITY MEET-~ EVOLUTIONARY DE-~IGN©

DRAWN IN THIRD ANGLE PROJECTION

"mm" DIMENSION INDICATED IN [ ]
DIMENSION IN [ ] IS FOR REF. ONLY

TOLERANCES (EXCEPT AS NOTED)

DECIMAL	ANGULAR	FRACTIONAL	SCALE
NONE ±.031 .X ±.015 .XX ±.010 .XXX ±.005	± 1/2°	± 1/32	1:4

DATE	DRAWN BY	CHECKED BY	APPROVED BY
3/31/2021		X	X

TITLE
2LT WALL MOUNT

PART NO. WALL — REV.

ITEM NO. 341-2W-BK (BK) — REV. A