GERBER

www.gerberonline.com

# Luxoval ™ Undercounter Lavatory

☐ **13-743**

## Features:

- Vitreous China
- Undercounter lavatory
- 17 5/8″ x 14 5/8″ oval lavatory
- Concealed Front Overflow
- ADA Compliant
- Faucet is not included

*13-743 Lavatory Shown*

## Fixtures:

| Models | 13-743 |
|---|---|
| Height | 7″ |
| Width | 17 5/8″ |
| Depth | 14 5/8″ |
| Inside Basin Dimensions | 15″ x 12″ |
| Shipping Weight | 13 lbs |

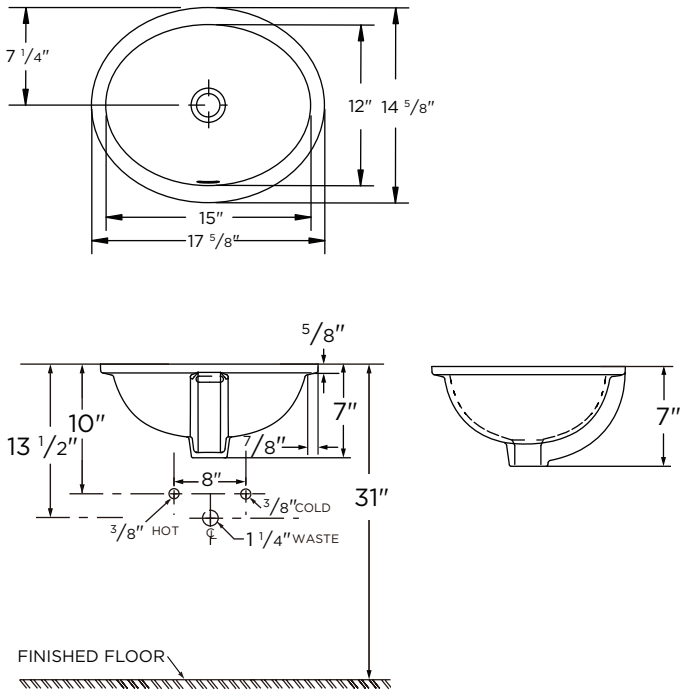


All dimensions are in inches.

## Accessories:

- None

## Colors/Finishes:

- White
- Other: Refer to Price Book for additional colors/finishes

## Warranty:

- Limited Lifetime Warranty; Five (5) Year Limited Warranty on other Parts

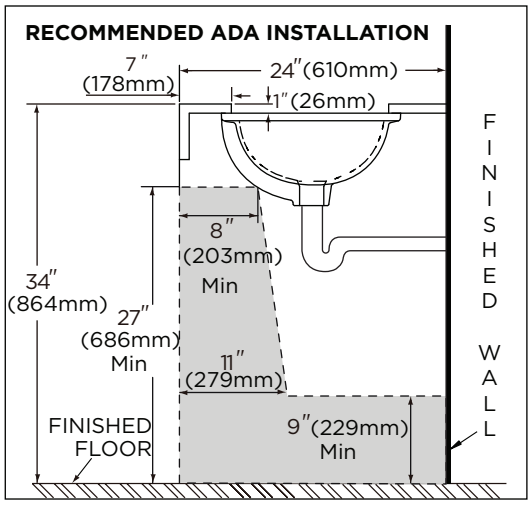


**NOTES: Illustrations may not be drawn to scale.**
*** Dimensions shown for locations of supply lines and "P" trap are suggested.**

**IMPORTANT:**
**Dimensions of fixtures are nominal and may vary within the range of tolerances established by ASME standard A 112.19.2**